Danbury Tufted

Description

As the sister piece to our traditional Danbury, this updated sectional features a tight back with a single row of button-tufting, loose bench seat cushions and round wood tapered legs.
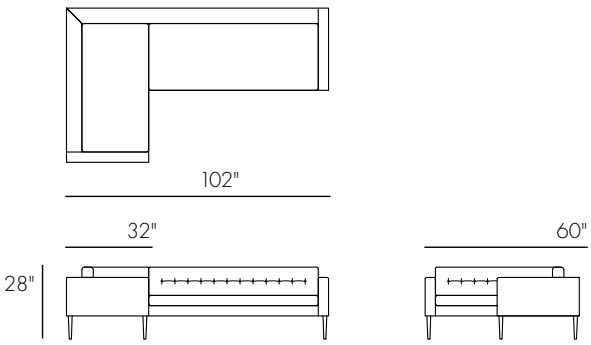
Available in custom sizes.